EVIER SIGNUS - GAMME CRISTADUR

SCHOCK

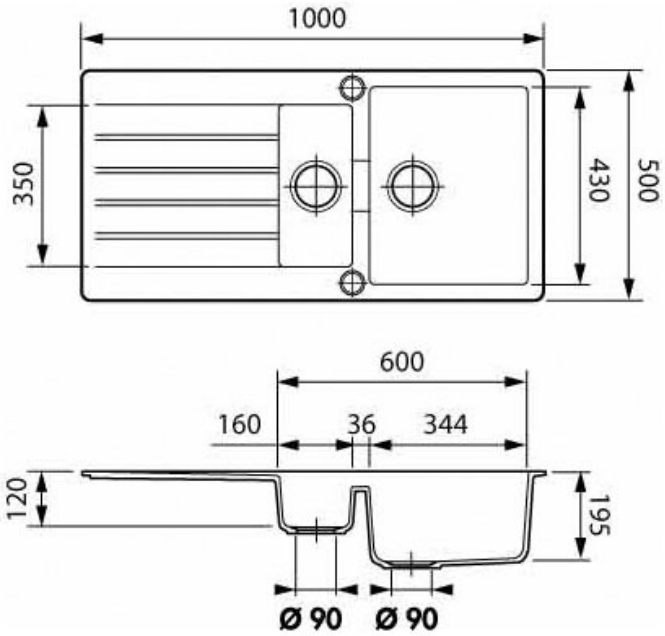

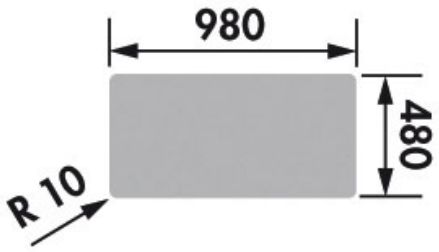
980
480
R 10