FIXATIONS POUR ROULETTES

GUY RAYMOND

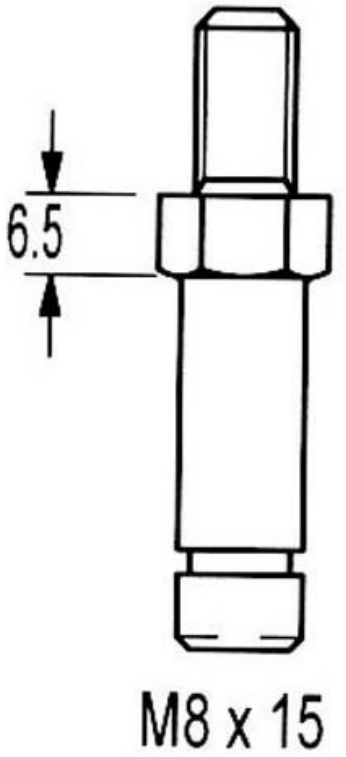

GUY-RAYMOND
ENGINEERING COMPANY LIMITED

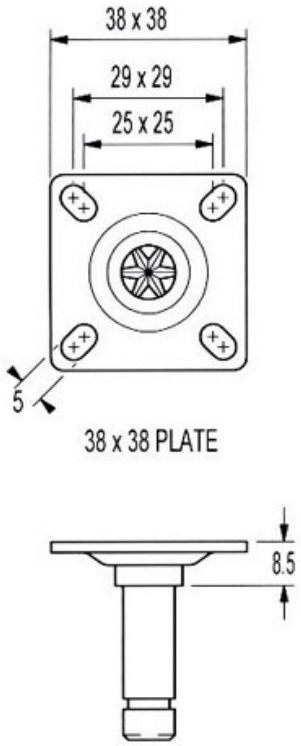

GUY-RAYMOND
ENGINEERING COMPANY LIMITED

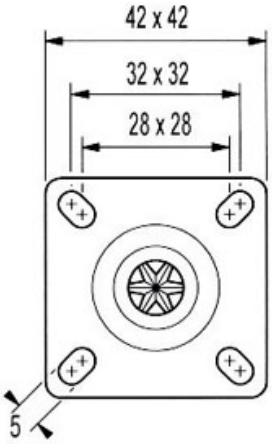

42 x 42 PLATE

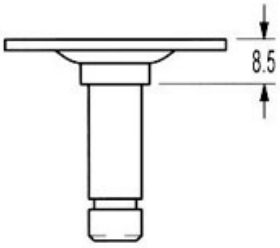
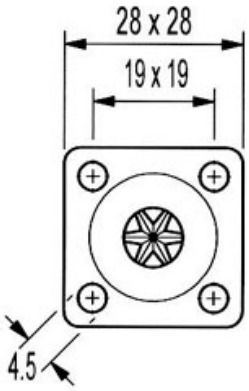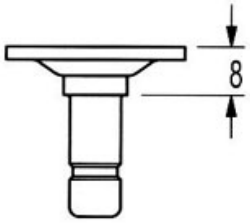
GUY-RAYMOND
ENGINEERING COMPANY LIMITED