KIT PORTA 100 HM / HMT

HAWA

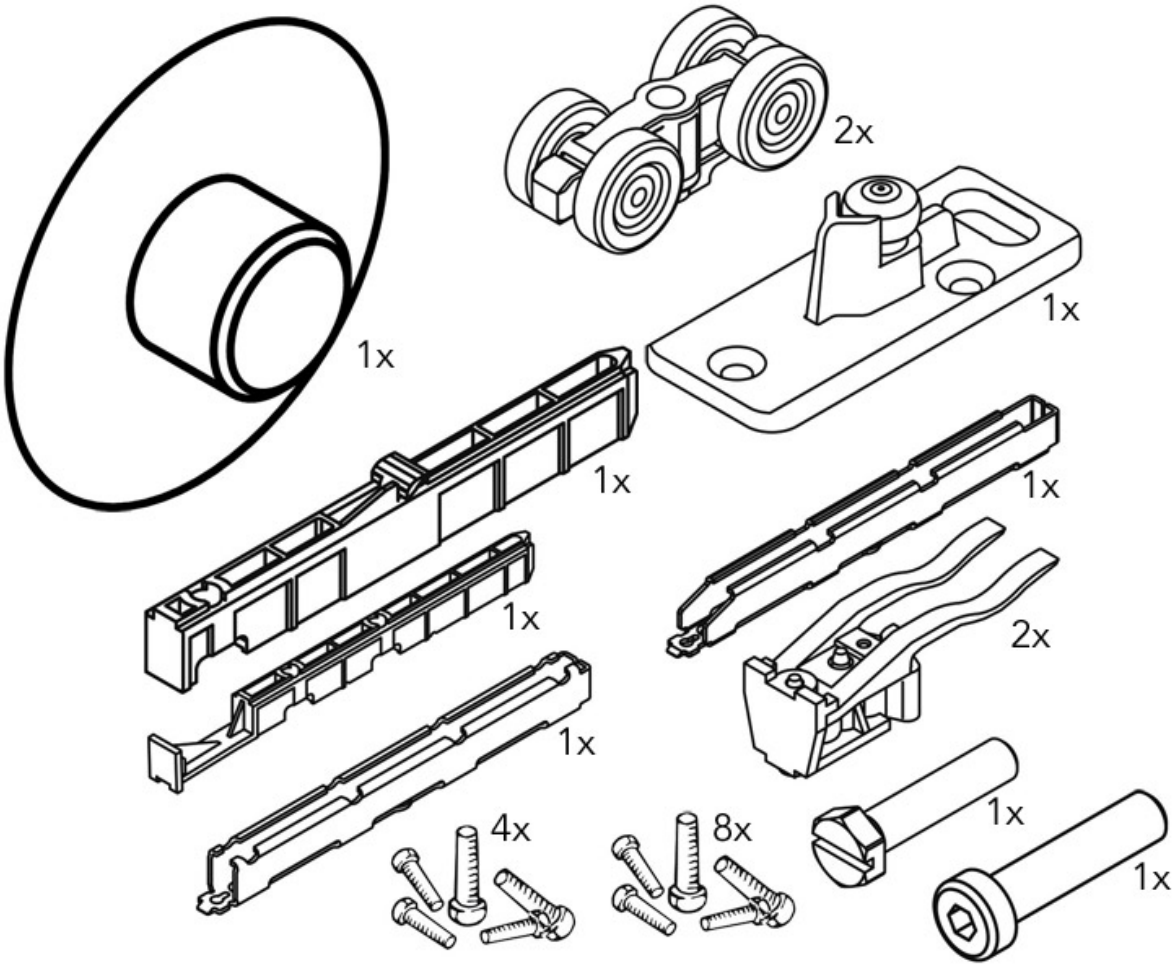

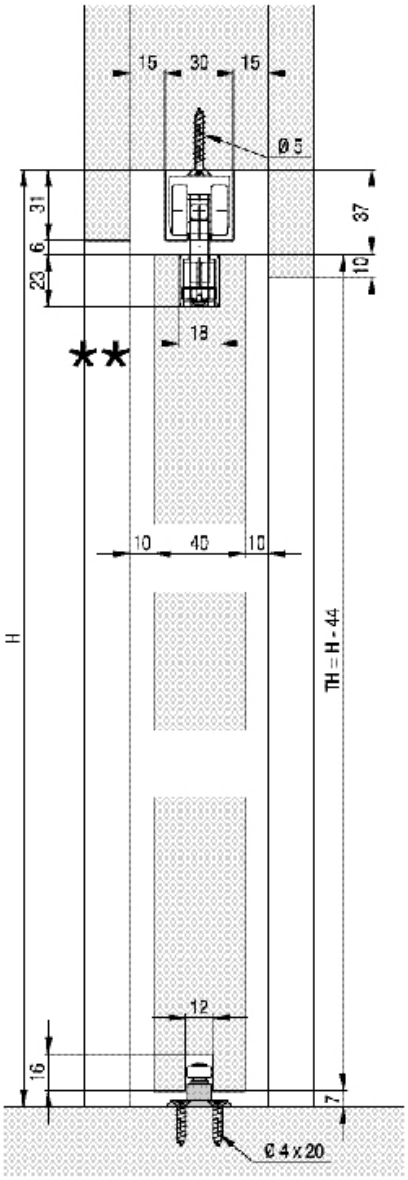
15
30
15
Ø 5
31
6
23
37
10
18
**
10
40
10
H
TH = H - 44
12
16
7
Ø 4 x 20