PATÈRE SUR LICE 4 CROCHETS MODULABLE

SIRO

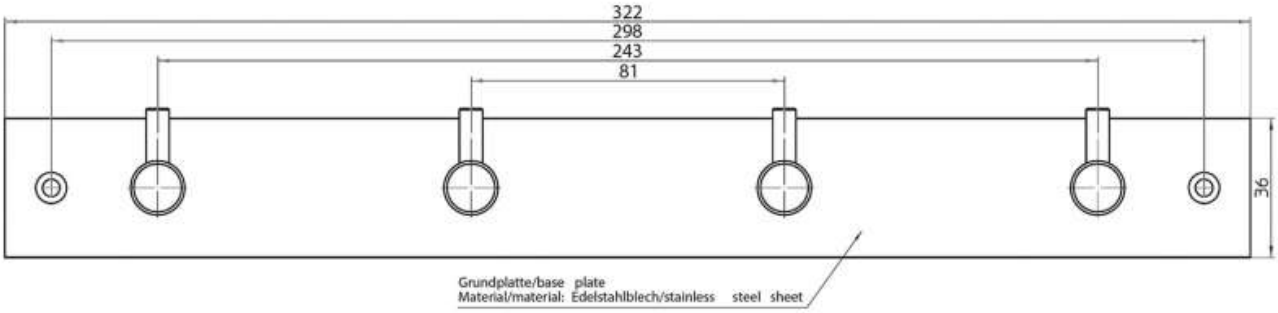

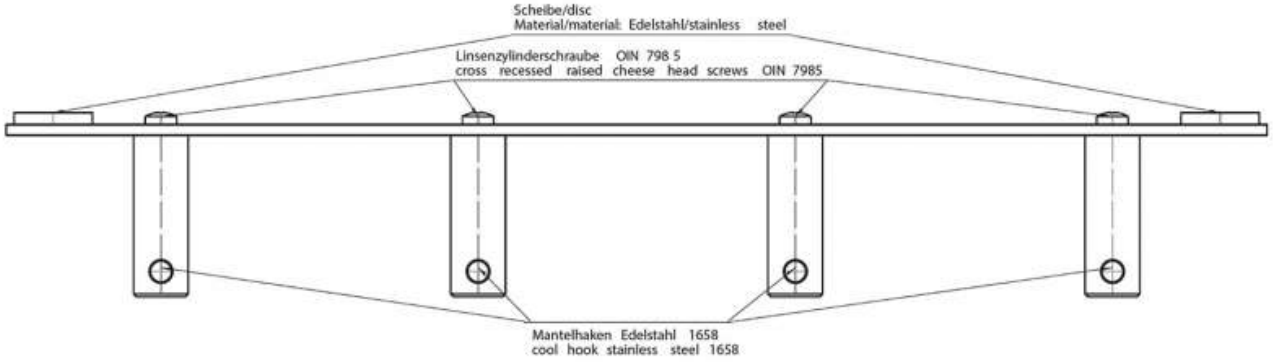
Scheibe/disc
Material/material: Edelstahl/stainless steel
Linsenzylinderschraube DIN 798 5
cross recessed raised cheese head screws DIN 7985
Mantelhaken Edelstahl 1658
cool hook stainless steel 1658

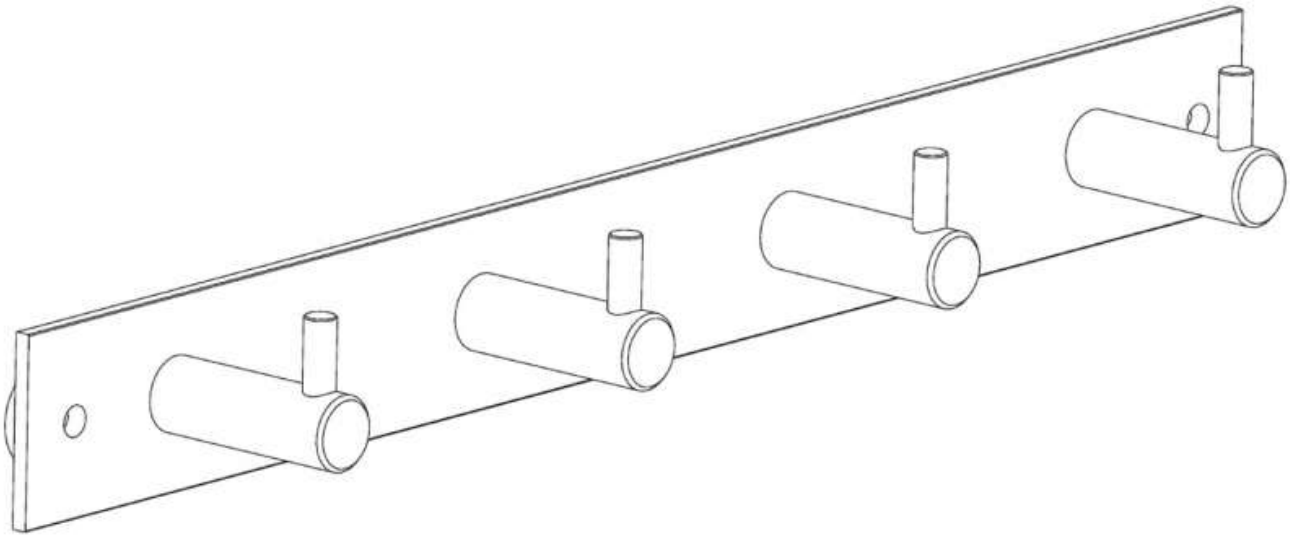

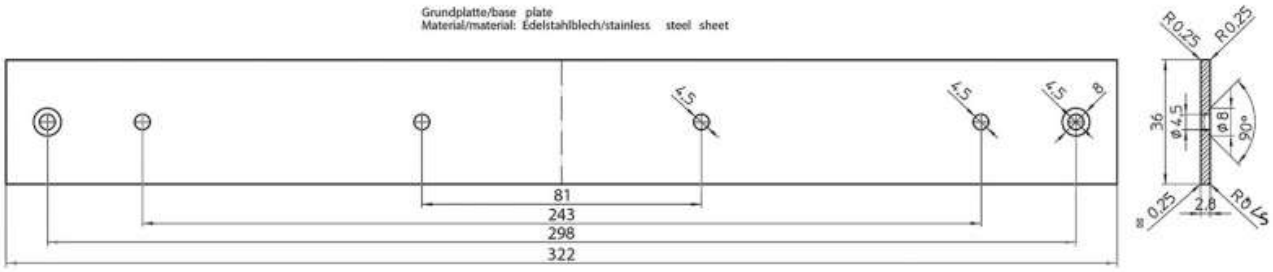
Grundplatte/base plate
Material/material: Edelstahlblech/stainless steel sheet
4,5
4,5
4,5
8
81
243
298
322
R0,25
R0,25
36
ø4,5
ø8
90°
2,8
R0,25
R0,25