SUPPORT REPOSE PIEDS

MB2

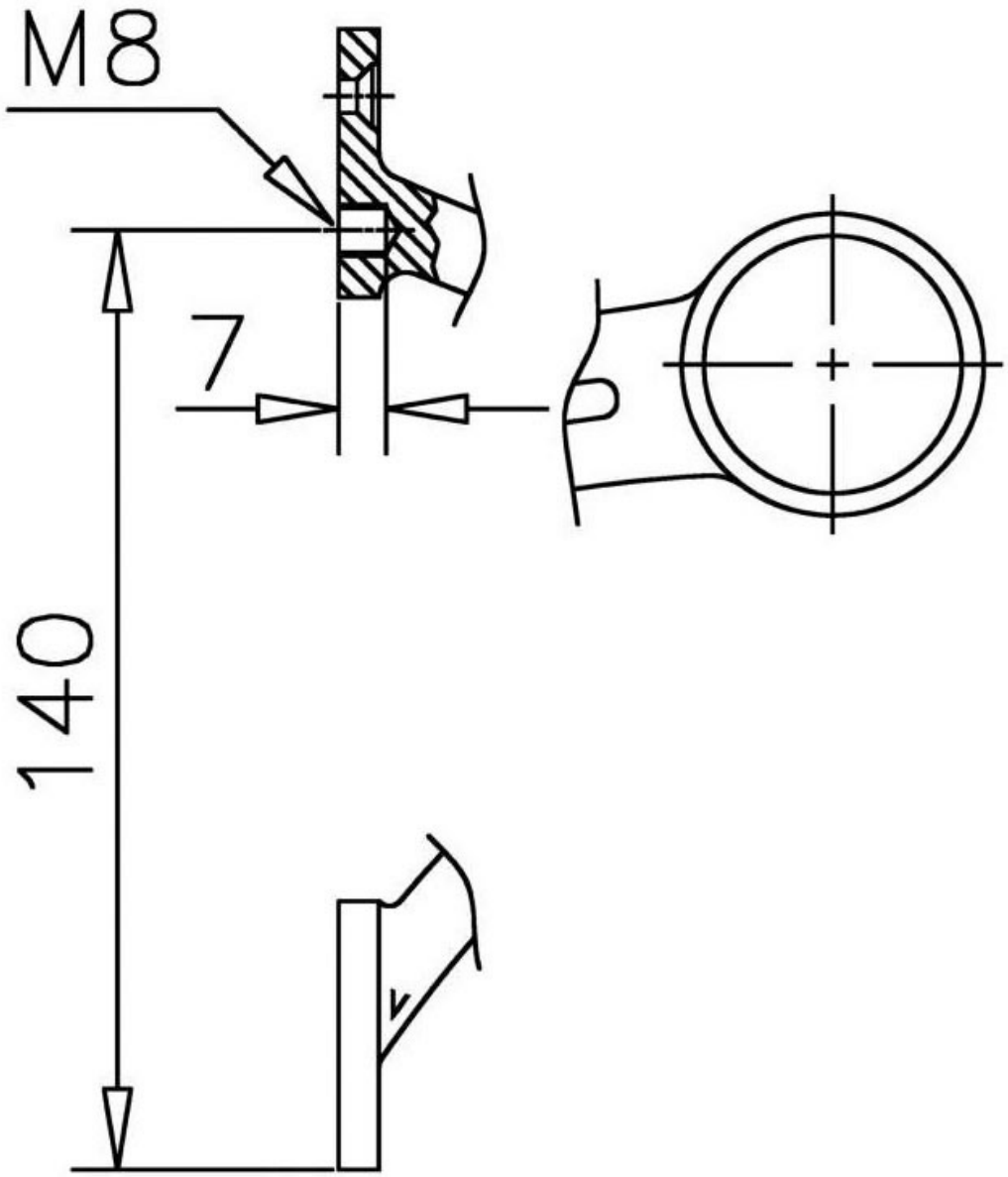

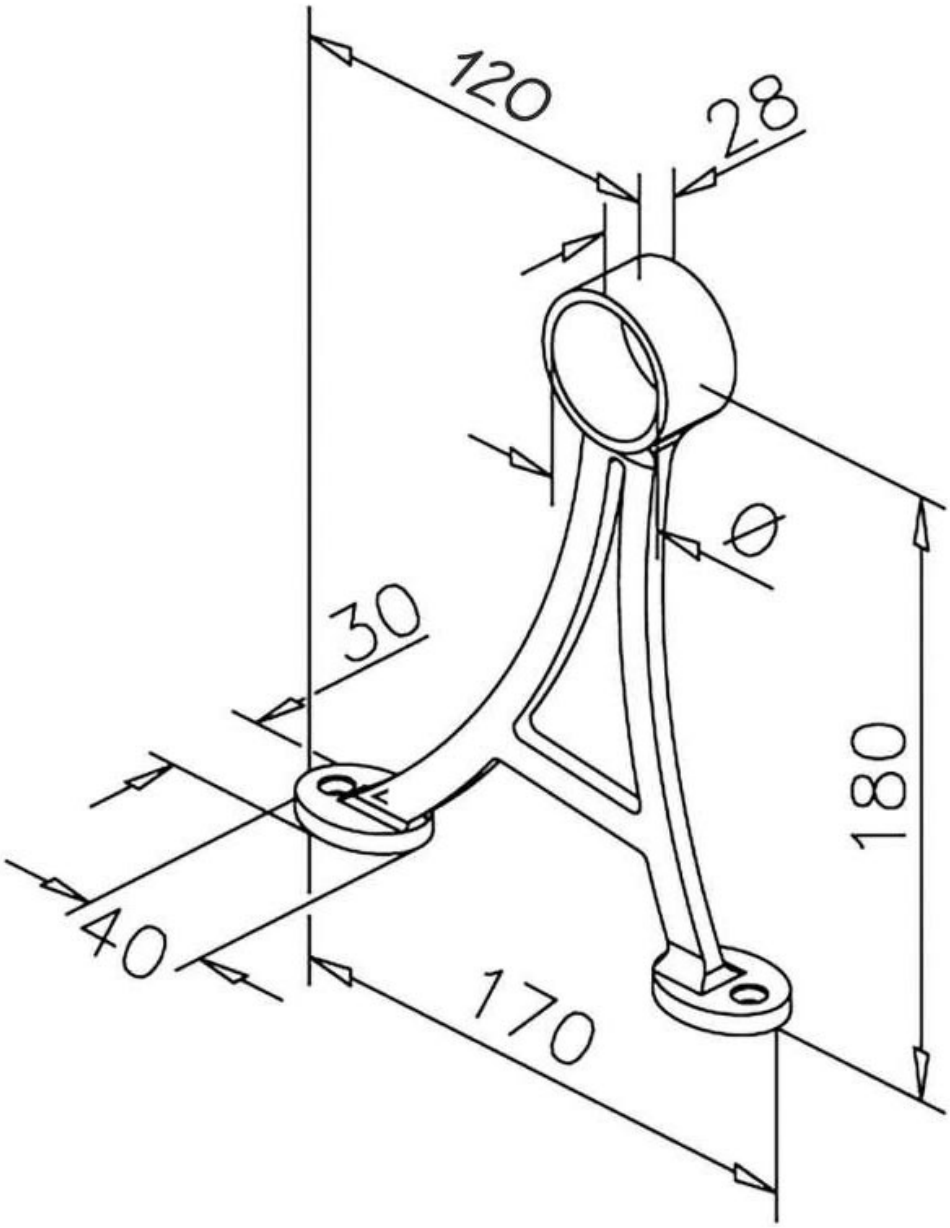
120
28
Ø
30
180
40
170